Features

- Resistance welded type crystal units
- High frequency stability and reliability
- A great number of standard frequencies and wide frequency range
- Higher frequency pullability and lower equivalent series resistance
- Lower cost and highly mass production capacity
- The best choice of TV, STB, LCDM, and Cable Modem
- RoHS Compliant / Pb Free

Electrical Specifications

Frequency Range	6.00 ~ 120.00 MHz
Load Capacitance	Series、6~32 pF、 or specify
Frequency Tolerance (at 25 ℃)	±10、±20、±30 ppm、 or specify
Frequency Stability Over Operating Temperature Range	±10、±20、±30 ppm、 or specify
Operating Temperature Range	-20 ~ +70 ℃、-40~+85 ℃、or specify
Storage Temperature Range	-40 ~ +85 ℃
Shunt Capacitance (C0)	7 pF Max.
Drive Level	1 ~ 1000 μW (100 μW typical)
Insulation Resistance	500 MΩ Minimum at 100VDC
Aging (at 25℃)	±3 ppm / year Max.

Equivalent Series Resistance(ESR)

Frequency Range (MHz)	Mode	ESRΩ(MAX)	
		UM-1	UM-5
6.00~7.99	FUND	45	-
8.00~9.99	FUND	40	40
10.00~14.99	FUND	30	30
15.00~40.00	FUND	25	25
30.00~39.99	3RD	50	50
40.00~49.99	3RD	40	40
50.00~100.0	3RD	35	35
80.00~120.0	5TH	80	80

Frequency Stability Over Operating Temperature Range

Temperature Range	Frequency Stability (ppm)						
	±3	±5	±7.5	±10	±15	±20	±30
0~+50℃	*	*	*	*	*	*	*
-10~+60℃		*	*	*	*	*	*
-20~+70℃			*	*	*	*	*
-30~+80℃				*	*	*	*
-40~+85℃					*	*	*

Dimensions

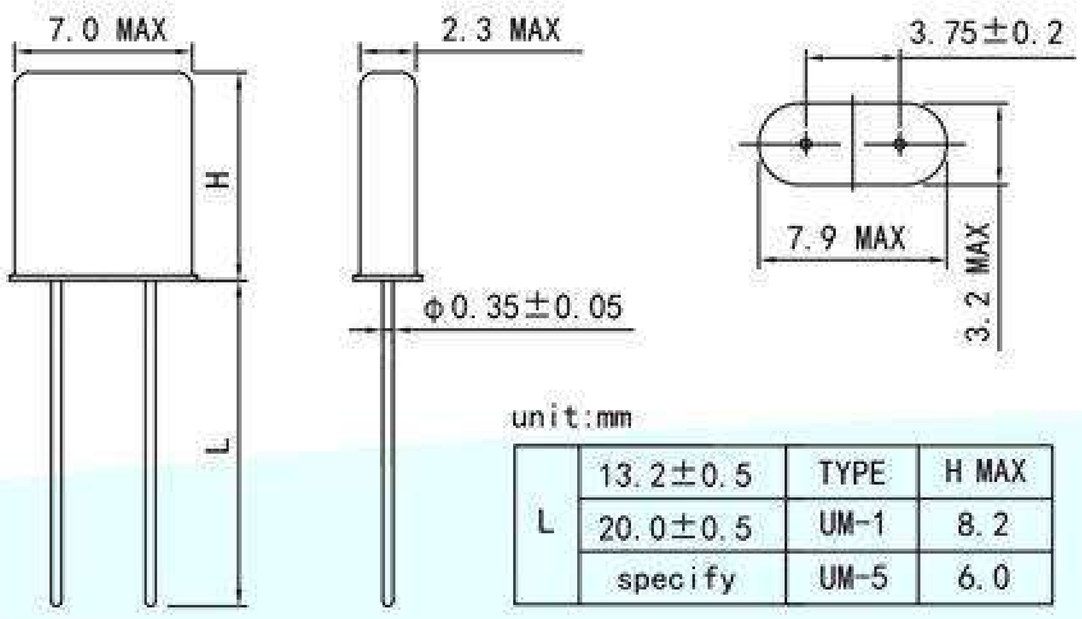

unit:mm

L	13.2±0.5	TYPE	H MAX
	20.0±0.5	UM-1	8.2
	specify	UM-5	6.0